STUDIO BAGNO

SYNTHESIS

STYLE

Semi Recessed

CODE

0TH (SYN56/0)
1TH (SYN56/1)

WEIGHT

11 kg

COLOURS

White
Glazed at rear

OVERFLOW & WASTE

32mm overflow plug and waste not included.

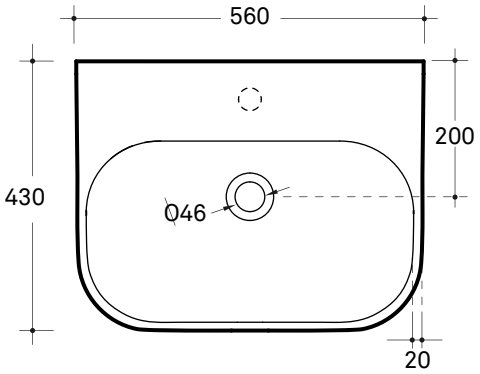

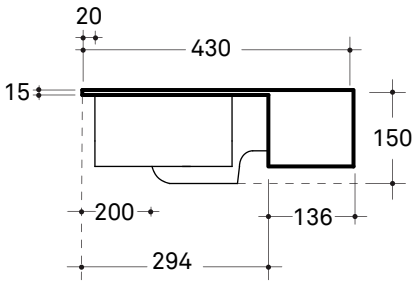

Note: All dimensions are in millimetres and are subject to normal manufacturing variances. Studio Bagno Pty Ltd reserves the right to vary specifications at any time without notice. **Date created:** 19/07/17.